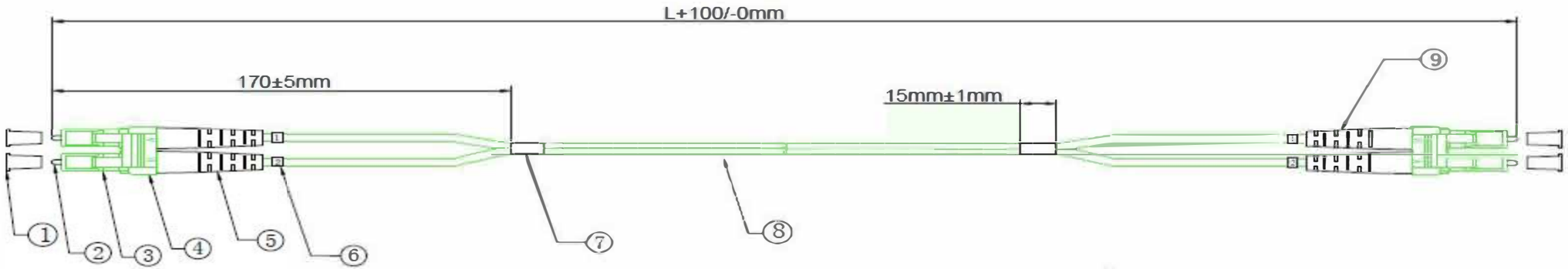

ITEM NO.	LENGTH	COLOUR
195816	0.5m	Lime green
187467	1m	Lime green
218703	1.5m	Lime green
187469	2m	Lime green
187470	3m	Lime green
187471	5m	Lime green
187472	7.5m	Lime green
187473	10m	Lime green
187474	15m	Lime green
187475	20m	Lime green

Note:
ROHS & REACH Compliant
Test:
Grade Designation:Each to Reference

TYPE	MULTI-MODE	Standard
Insertion LOSS	≤0.3dB	IEC 61300-3-4
Return LOSS	≥30dB	IEC 61300-3-6
Test Wavelength	850nm	
Typical	≤0.10dB	
Durability	0.2dB after 500 Times mating	IEC 61300-2-2
End face	×400	IEC/PAS 61300-3-35

MATERIAL LIST:

NO	SPECIFICATION STANDARD	QT'Y	REMARK
⑨	LC 2.0 White Boot	2	
⑧	Fiber Optical Cable Duplex Φ2.0 OM5 50/125um LSZH Lime Green	L	
⑦	Black Heat shrink tubing	2	
⑥	Ring 1、2	4	
⑤	LC 2.0 White Boot	2	
④	LC Duplex Clip Lime Green	2	
③	LC Duplex Connector Lime Green	4	
②	LC/UPC MM Ferrule	4	
①	LC White Dust cap	4	

BY	CHK	REVISION RECORD MODIFICATIONS	DATE	REV.
		NEW	2018-10-9	A

CUSTOMER		ITEM NO.	
NAME			MM
DRAWNBY	CHECKBY	APPOBY	DATE
Kerry	Kerry		2018-10-9